SHARP SERVICE MANUAL

CODE: 00ZMZ1D04///E

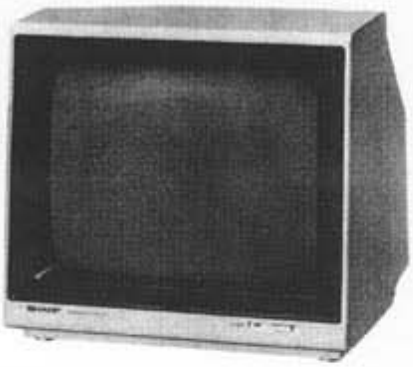

GREEN DISPLAY

MODEL MZ-1D04
(For Model 700)

INTRODUCTION

The MZ-1D04 is the green display unit used for the terminal of Model 700 Computer Series
Signal input is composit input and theRCA PIN JACK is used for the input terminal.

SPECIFICATION

Receiving frequency band:	Video signal frequency
Receiving circuit	
• **Video amplification:**	Three stages
• **Vertical oscillation:**	Multivibrator
• **Horizontasl oscillation:**	Hartley method
• **Source power rectification:**	Capacitor input, bridge rectified
Cathod ray tube:	12", 90° deflection, E2292B-31ND
CRT size:	25.4cm wide, 20.2cm high, 29.2cm diagonal
Power consumption:	29W
High voltage output:	11.8KV (at 0μA)
Intergated circuit board:	One
Transistors:	Eleven
Diodes:	Eighteen
Power supply:	AC rating voltage
Cabinet:	Plastic made
Physical dimensions:	31.3cm wide, 32.7cm deep, 28.9cm high
Weight:	6.3Kg
Input terminal:	RCA PIN JACK
Input signal:	Composit input, 1Vp-p
AC cord:	2.0m
Accessory:	Instruction manual AC cord

FOR SAFER SERVICING AND SAFETY CHECK-OUT

Please pay special attention to the following conditions during servicing and check-out.

1. Observe cautions
Where special attention is required on such as cabinet, chassis, and component parts is noted with caution using label or stamp.
You have to observe there cautions as well as those in Instruction Manual.

2. Use parts of rated performance
Since parts component used in the unit has specific rating for safety performance such as non-inflamability, voltage withstanding, etc., use the item of identical characteristics. Among all, parts components indicated with the "⚠" mark in the circuit diagram and parts list must be equal in its property as it is critical to the performance of the unit.

3. Replace the parts and wiring on their original locations
For safety's sake, some of items are protected with insulating materials such as tube and tape, or the printed board is isolated from other components. Also, internal wirings are installed and held by such as clamp to keep them away from heat generating component and high tension parts. Whereas, these wirings have to be installed back to their original locations.

4. Handle the CRT with care
The explosion-proof cathod ray tube is guaranteed of its safety against explosion as long as it is installed in the unit. However, pay special attention when it was removed from the unit or when servicing it from the back of the unit.
Never give impact of the cone section.

5. X-ray
The CRT and high tension circuits have safety measures against X-ray. Therefore, use the specified parts to trouble-shoot the CRT and high tension circuit, and, never try to modify the circuit under any circumstance. Use of the parts other than specified may cause to rise the high voltage which generates X-ray from the CRT.

6. Perform check-out after servicing
After servicing, be sure to confirm safety by checking that all removed screws, component parts, and wirings were replaced as before and see that no damage has been done to the serviced area. Besides, ensure insulation of the input signal terminal against metal portion and plug edges.

1. NAME OF FUNCTIONAL COMPONENTS

- FRONT VIEW

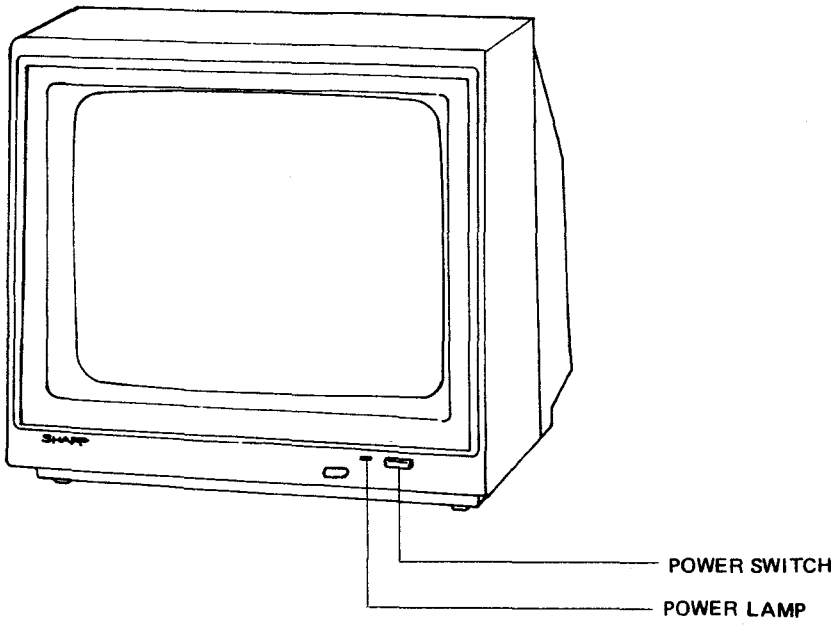

- REAR VIEW

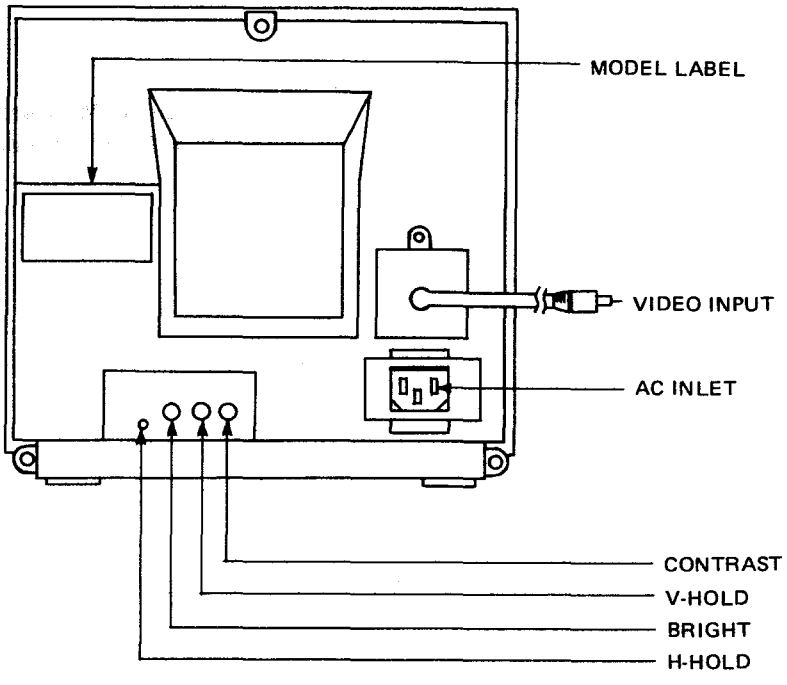

2. HOW TO REMOVE MAJOR COMPONENTS

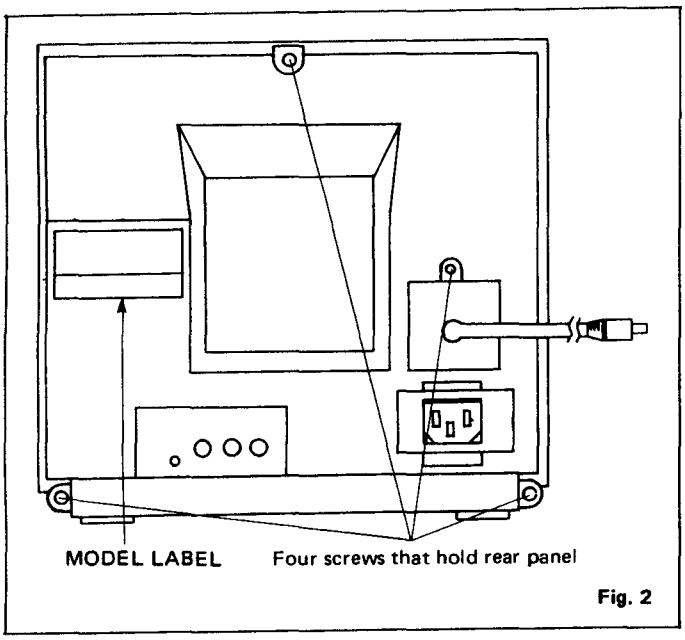

Fig. 2

- **Removing the front panel**

*Be sure to pull out the AC cord before the job.

(1) Remove four screws that hold the rear panel.

(2) Move away the rear panel to remove it.

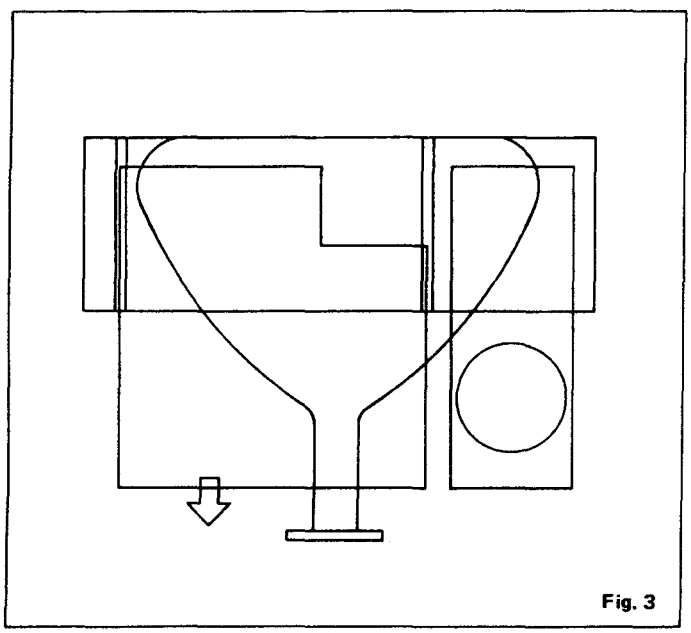

Fig. 3

- **How to remove Main Board**

Pull the Main Board toward.

3. ADJUSTMENTS

*Adjustments need conection of the microcomputer.
*Although adjustments had been done to the best conditions before the machine left the factory, follow the procedures described next, in case there is a need of adjus ment due to shift in adjustment or after parts replacemen

- **+B power suply circuit adjustment**

(1) Make sure that the AC supply is within a range of rocal voltage ±5%.
(2) Adjust the 11.5V adjusting potentiometer so that the DC voltage becomes 11.5V between the emitter of Q701 and GND.

- **Horizontal synchronization adjustment**

(1) Control the microcomputer so that all of data display periods should become white (horizontal 36.088μs, vertical 12.811ms).
(2) Manipulate the horizontal synchronization adjusting coil so that the image should appear on the center.
(3) Repeat power on and off for several times and check that no image blur occurs.

- **Horizontal amplitude adjustment**

(1) Control the microcomputer so that all of data display periods should become white (horizontal 36.088μs, vertical 12.811ms).
(2) Manipulate the core of the horizontal amplitude adjusting coil so that the amplitude at the center of the screen should become 213mm.

NOTE: Clockwise turn of the horizontal amplitude adjusting coil core makes amplifiation wider.

- **Vertical amplitude adjustment**

(1) Control the microcomputer so that all of data displ periods should become white (horizontal 36.088 vertical 12.811ms).
(2) Manipulate the vertical amplitude adjusuting potenti meter so that the amplitude of the image at the cent should become 160mm.

- **Focus adjustment**

(1) Operate the microcomputer to generate characte
(2) Manipulate the focus adjusting potentiometer that an optimum of focus should be obtained.

- **Sub-brightness adjustment**

(1) Operate the microcomputer to generate characte
(2) Make it adjusted so that no raster should be visit even if the brightness volume is set to its maximu

- **Vertical linearity adjustment**

(1) Operate the microcomputer to generate characte
(2) Manipulate the vertical linearity potentiometer that the vertical linearity should set to the best.

4. TROUBLESHOOTING

Circuits to be checked
- Power supply circuit
- Horizontal circuit

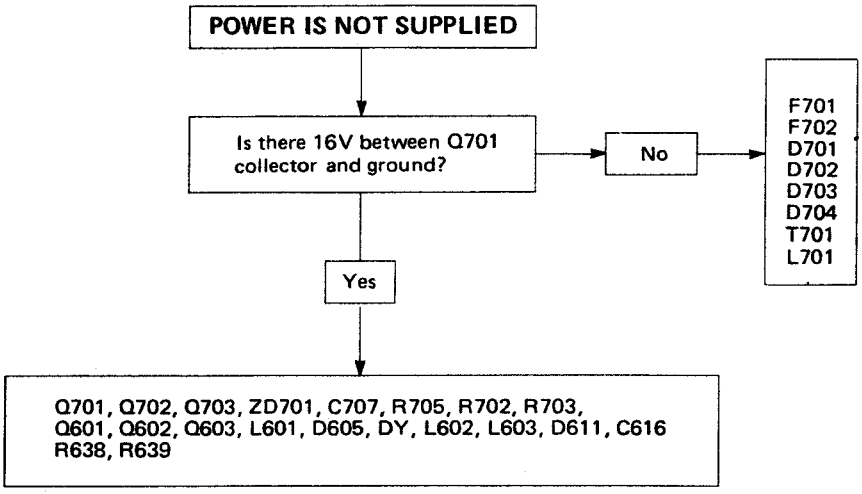

Circuits to be checked
1. Raster not visible
   - Power supply circuit
   - Horizontal circuit
2. High voltage is on, but no raster
   - Video output circuit
   - Horizontal circuit
3. No high voltage supply
   - High voltage circuit

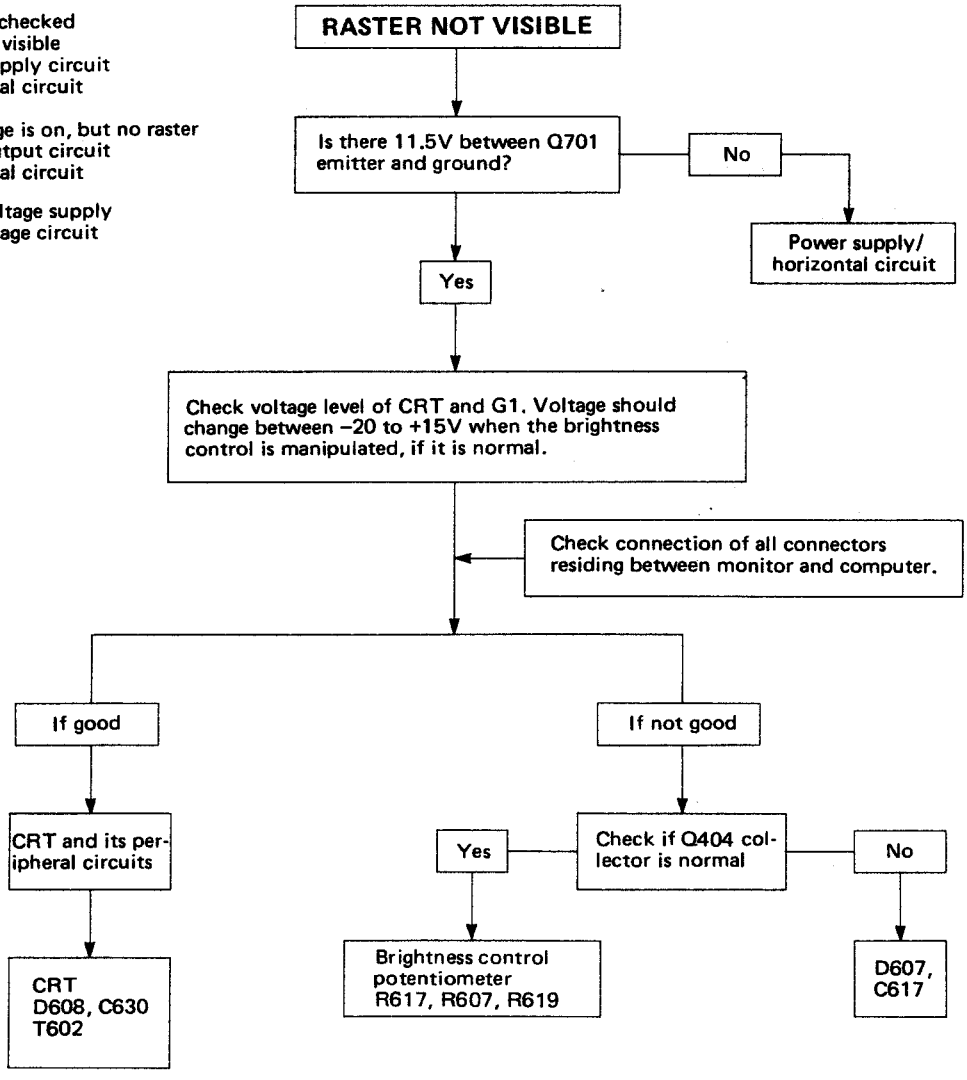

Circuit to be checked
Video and its peripheral circuits

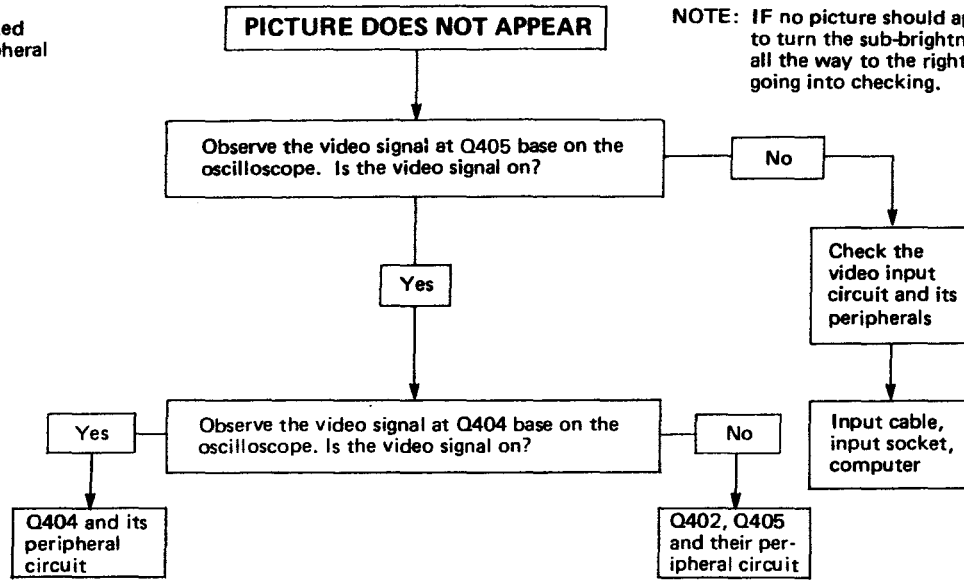

NOTE: IF no picture should appear, try to turn the sub-brightness knob all the way to the right before going into checking.

Circuit to be checked
- Horizontal synchronization circuit

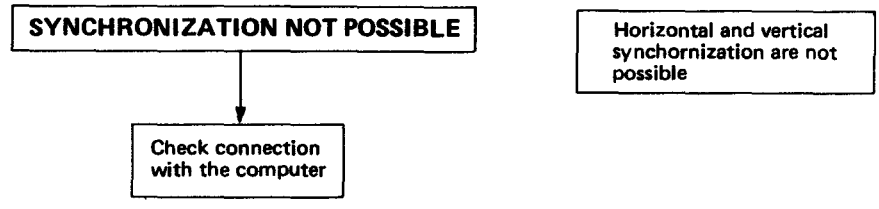

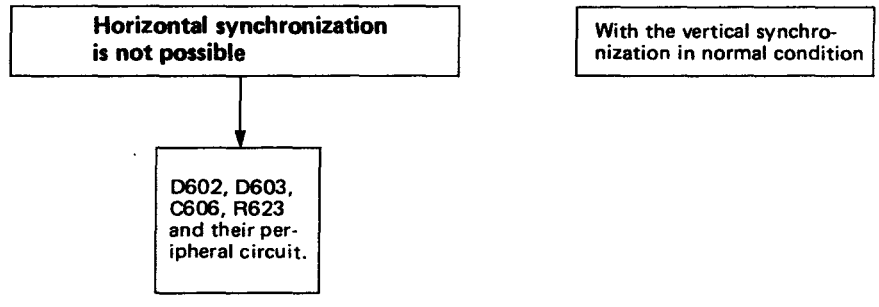

Circuit to be checked
- Vertical synchronization circuit

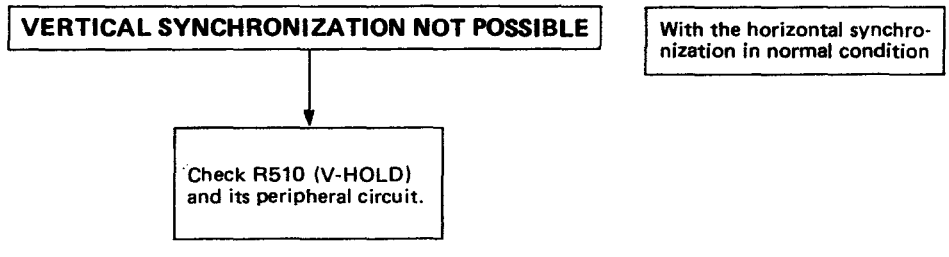

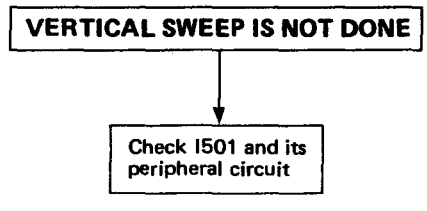

NOTE: During the check, drop the brightness to prevent the CRT from being damaged.

5. CHASSIS LAYOUT

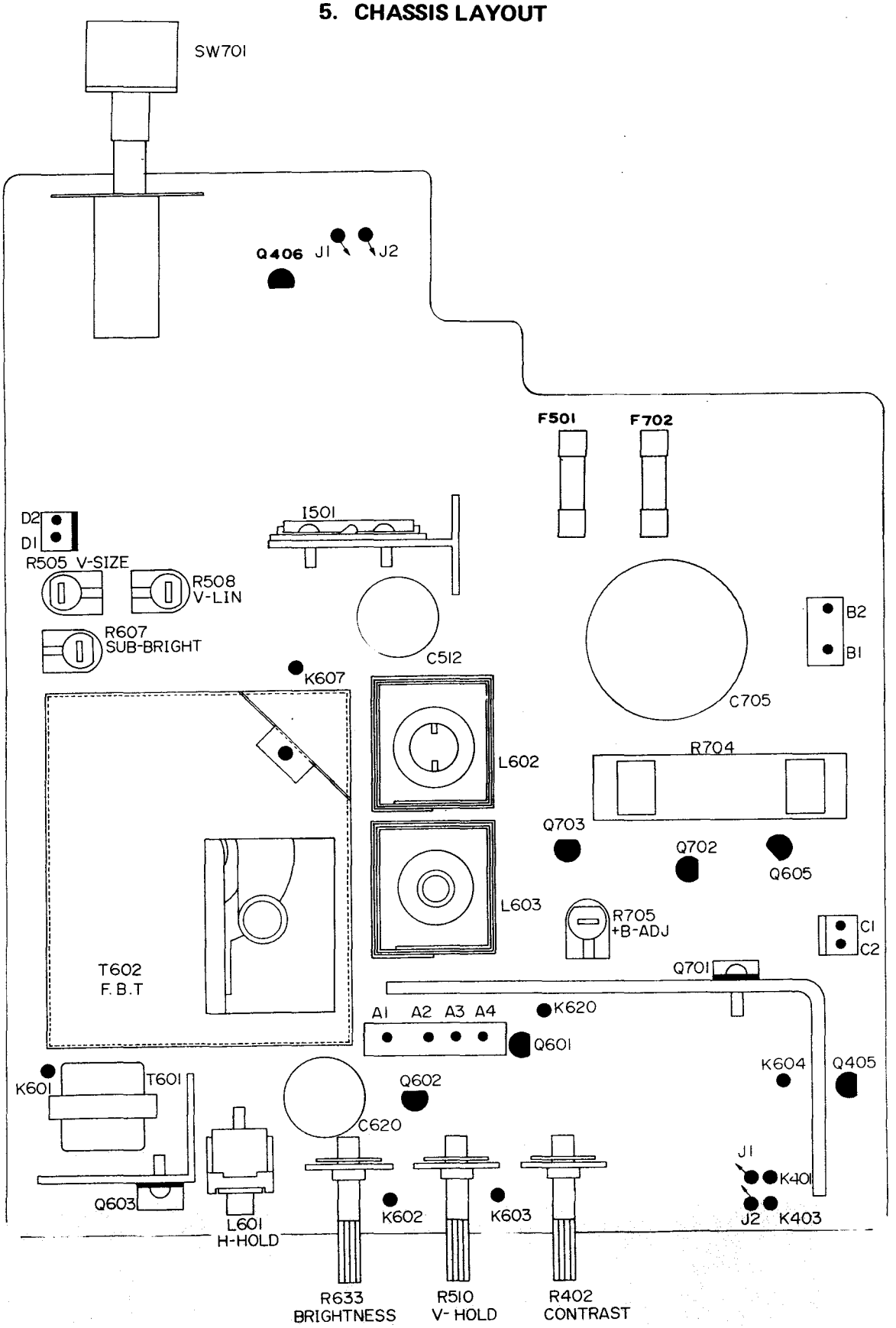

6. SCHEMATIC DIAGRAM AND WAVEFORMS

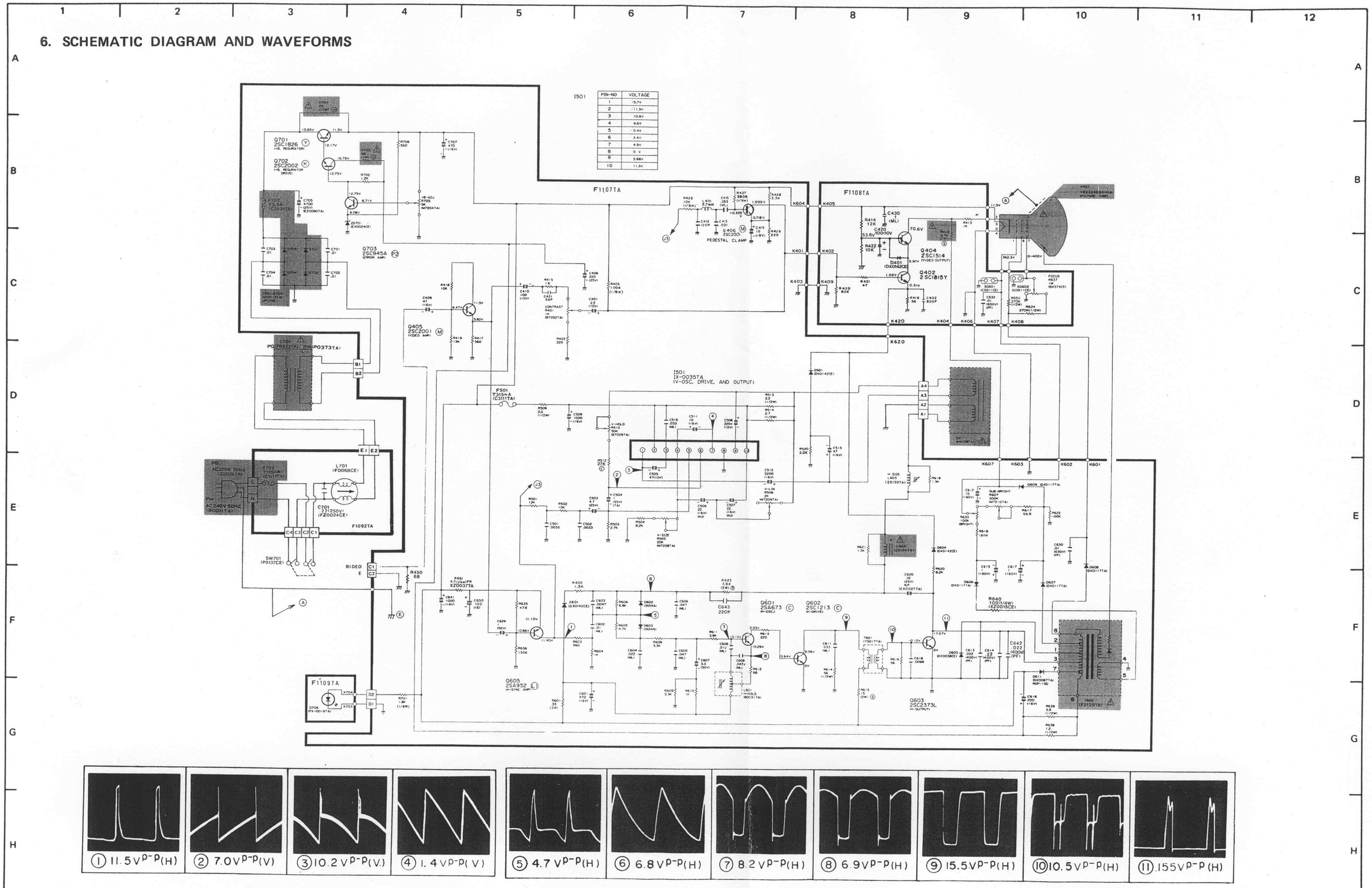

PIN-NO	VOLTAGE
1	-5.7V
2	-11.3V
3	10.6V
4	9.6V
5	-0.4V
6	2.4V
7	4.9V
8	0 V
9	5.68V
10	11.3V

7. PRINTED WIRING BOAD ASSEMBLIES

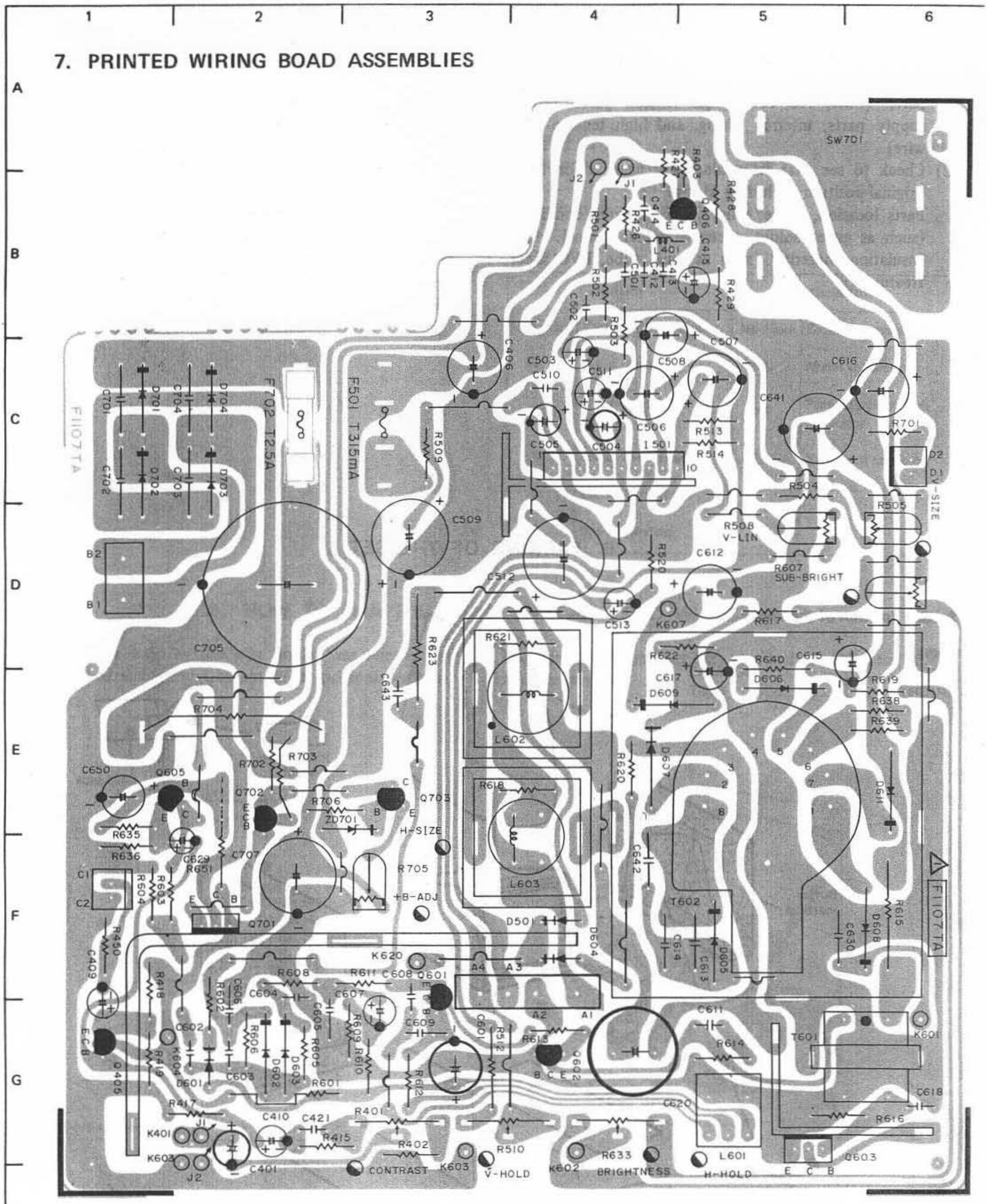

P.W.B-A Mother Board (Wiring Side)

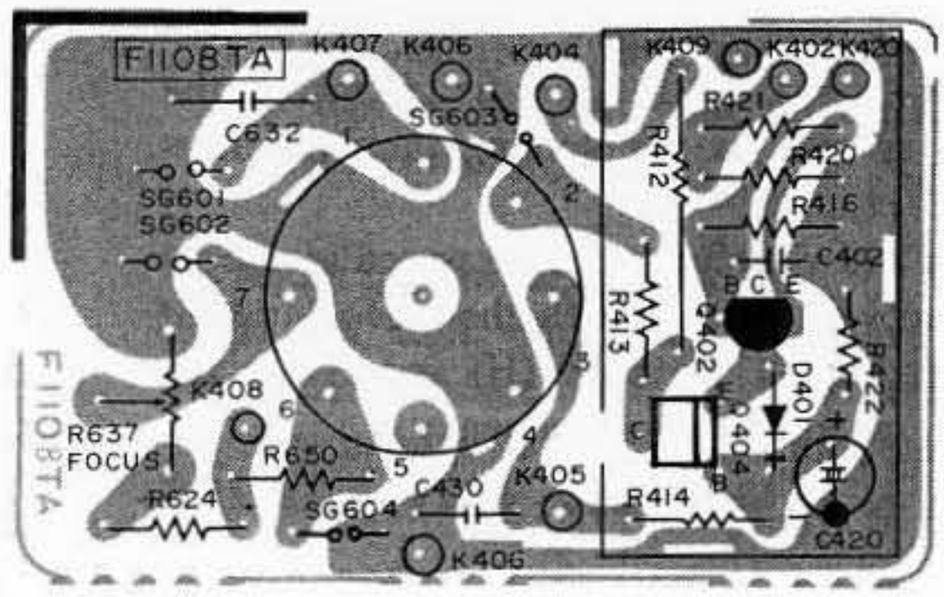

P.W.B-B CRT Socket Board (Wiring Side)

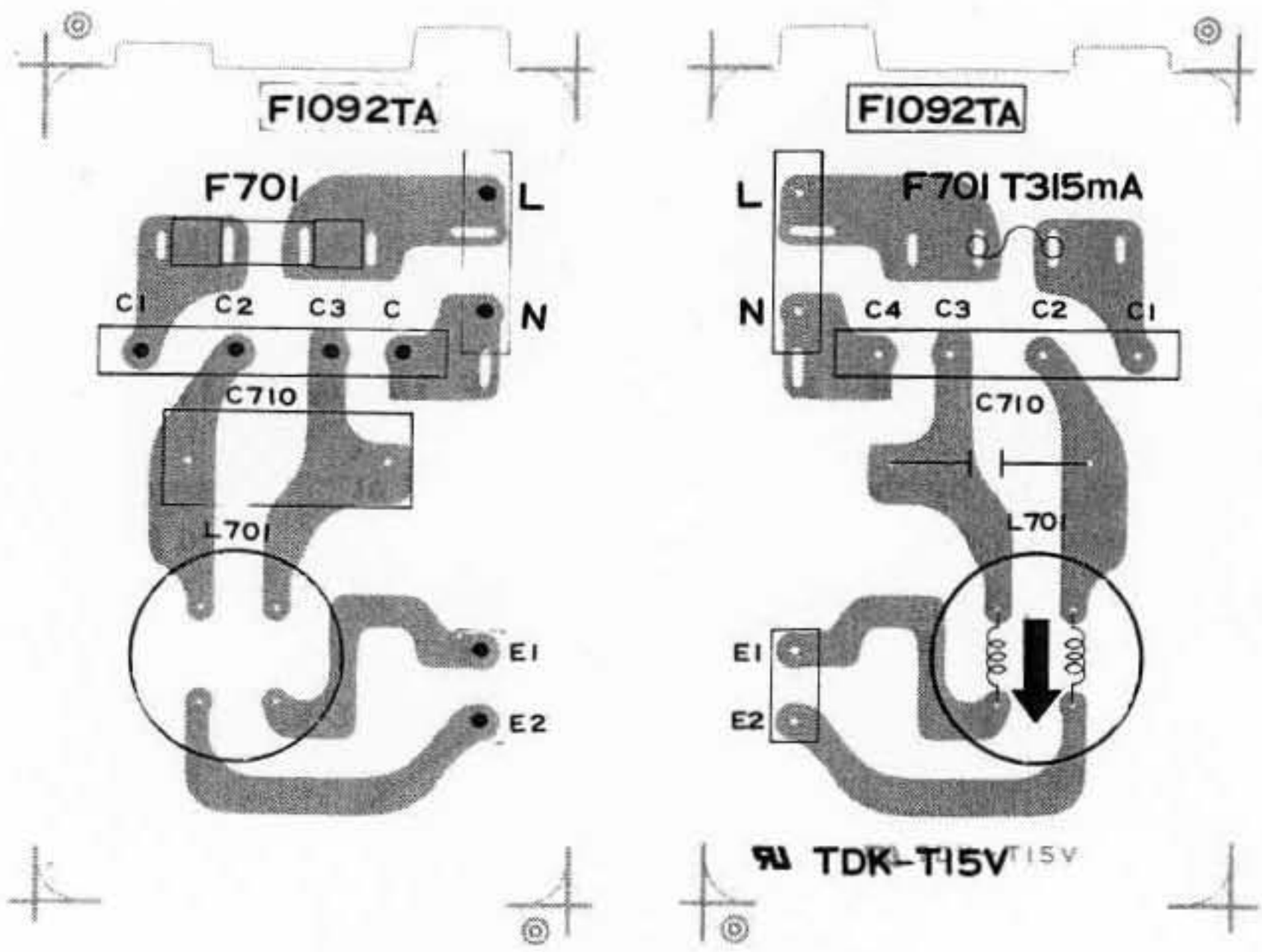

P.W.B-C Switch Board (Wiring Side)

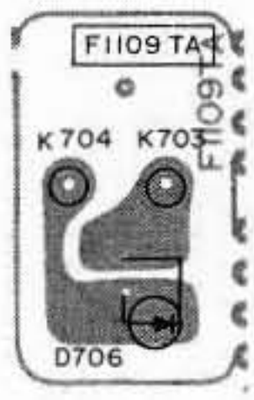

P.W.B-D LED Board (Wiring Side)

- **Description of wiring diagram**

(1) Because this wiring diagram is of the basic circuit, there may be some differences depending of the unit used.

(2) Parts components noted with the " ⚠ " mark are critical for the safety of the unit.
To replace these items, use the specified items for the safety's sake, as well as maintaining proper performance.

(3) Voltage values and waveforms are measured at supply voltage of rocal voltage ±5% with the video input of 0V (screen not bright). Notation (H) and (V) in the waveform represents the repeat frequency.

(4) Legends for resistors and capacitors

Resistor

Unit: No mark . . . ohms K . . . Kohms M . . . Mohms

Capacitor

Rated power: No mark . . . 1/4W
Unit: No mark or μ . . . μF P . . . pF
Rated voltage: No mark . . . 50V

[Kinds]

Resistor		Capacitor	
No mark	Carbon film resistor	No mark	Ceramic capacitor
C	Solid resistor	ML	Mylar capacitor
S	Oxide metal film resistor	PF	Polyprepylene film capacitor
N	Metal film resistor	TA	Tantalum capacitor
W	Cement resistor		
T	Special resistor		

8. HOW TO SHAPE UP AND THREAD LEAD WIRES

When any wire held by the wire holder was removed at the time of servicing must be set to its original position.

Improper wire threading may give bad effects to the safety and performance.

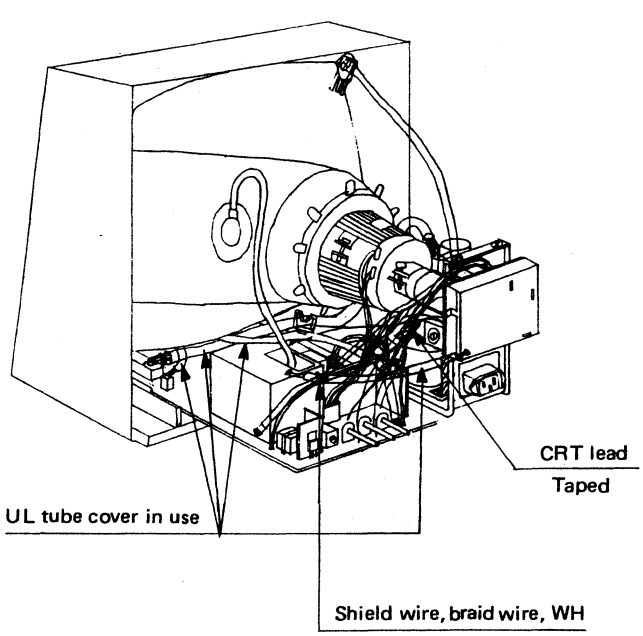

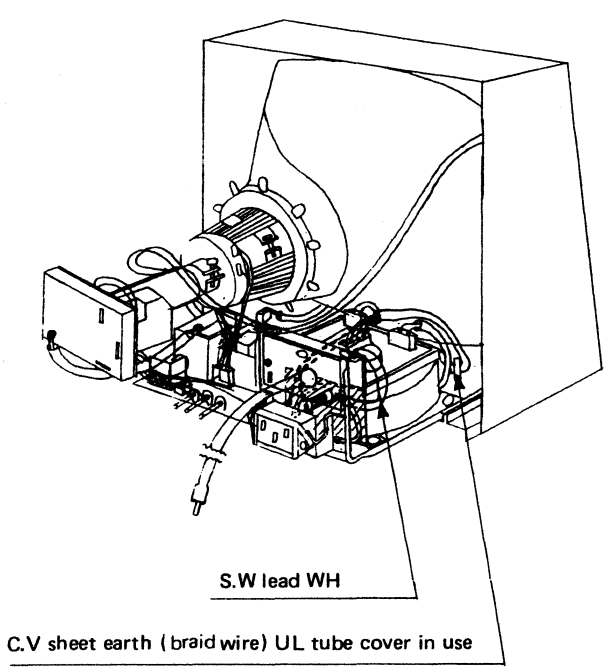

Safety check-out at the time of servicing

1. Servicing must always be reliable.

(1) Use the specified item to replace any component parts. (Fuse, AC cord, high tension parts, power supply parts, internal wiring, and high tension lead wire)

(2) Check to see that everything have been set on their original position, including wirings.
Parts location, space, wire shape, soldered condition (such as jutted solder, excessive solder, tunnel, etc.). Insulation materials (such as tape, tube, PVC sheet treatment).

2. Safety check-out even after servicing

(1) Remove dust, then check intrusion of any alien object such as solder fragments and cloth fragments.

(2) Test insulation using the ohmmeter. (Between both terminals of the AC plug and metal exposed section of the DIN terminal)

3. About high voltage circuit

Since the high voltage sections have been set to their rated values before the machine left the factory, never try to change high voltage value. Impression of unnecessary high voltaged may cause to emit X-ray or discharge corona.

9. PACKING OF THE SET

Setting Position of the knobs

POWER . . . . . OFF
V-HOLD . . . . . NORMAL
BRIGHT . . . . . BEST

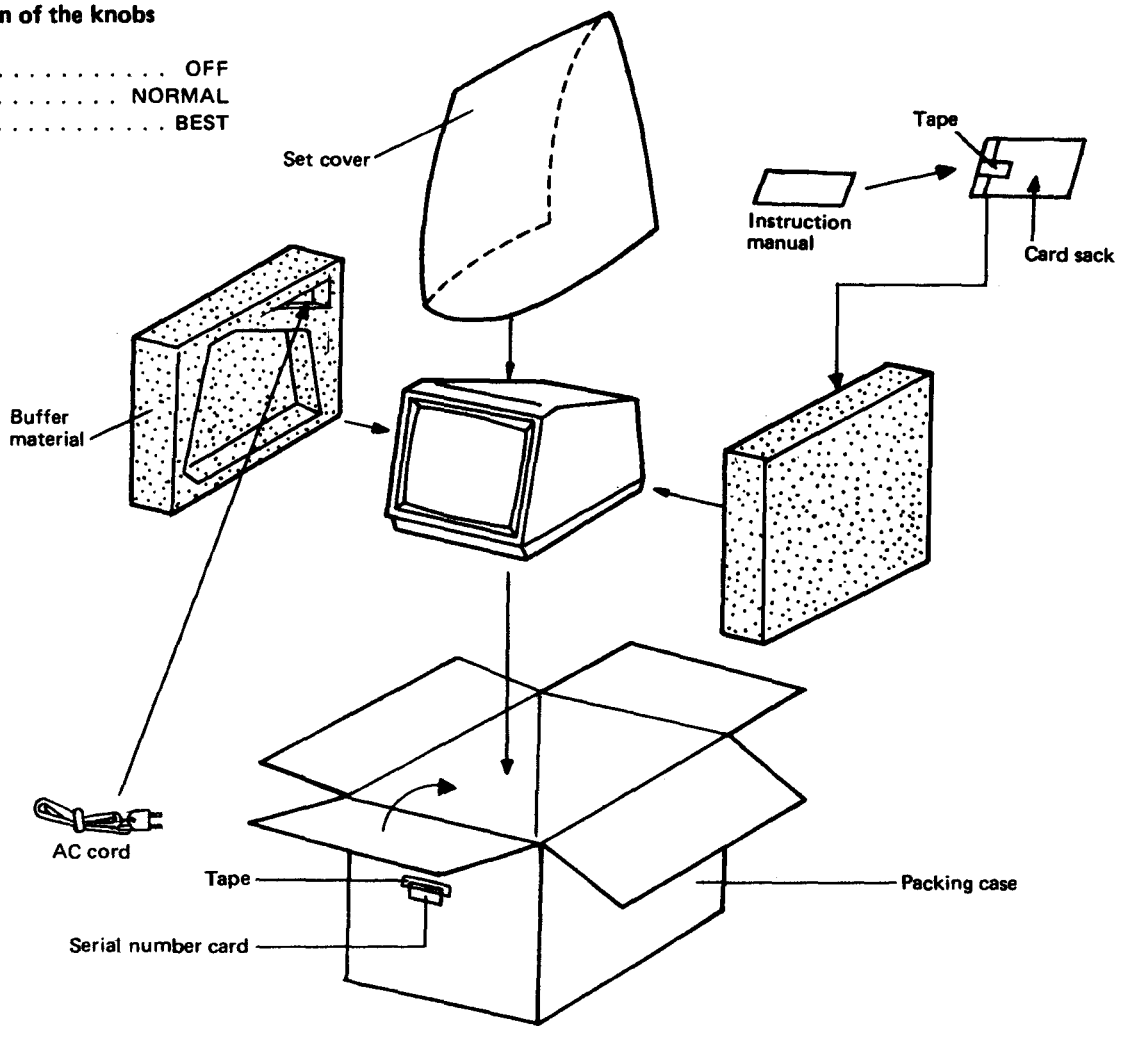

PARTS LIST

1 CRT,IC

NO.	PARTS CODE	PRICE RANK	NEW MARK	PART RANK	DESCRIPTION	
⚠ 1	VBE2292B31N1A	BU		B	Picture tube	
2	RH-iX0035TAZZ	AN		B	I.C.	[1501]

2 Transistors

NO.	PARTS CODE	PRICE RANK	NEW MARK	PART RANK	DESCRIPTION	
1	VS2SA673-C/1A	AC		B	Transistor	[Q601]
2	VS2SA952-L1-1	AD		B	Transistor	[Q605]
3	VS2SC1213-C1A	AC		B	Transistor	[Q602]
4	VS2SC1514//-1	AE		B	Transistor	[Q404]
5	VS2SC1815YW-1	AB		B	Transistor	[Q402]
6	VS2SC1826-Y1A	AH		B	Transistor	[Q701]
7	VS2SC2001-M-1	AC		B	Transistor	[Q405/Q406]
8	VS2SC2002-K1A	AD		B	Transistor	[Q702]
9	VS2SC2373L/1E	AG		B	Transistor	[Q603]
10	VS2SC945AP2-1	AB		B	Transistor	[Q703]

3 Diodes and LED'S

NO.	PARTS CODE	PRICE RANK	NEW MARK	PART RANK	DESCRIPTION	
1	RH-DX0038CEZZ	AB		B	Diode	[D605]
2	RH-DX0087TAZZ	AE		B	Diode	[D611]
3	RH-DX0115TAZZ	AC		B	Diode	[D701-D704]
4	RH-DX0117TAZZ	AC		B	Diode	[D606/607/608/609]
5	RH-DX0142CEZZ	AC		B	Diode	[D501,601,604,404] ← 401?
6	RH-EX0024CEZZ	AF		B	Zener diode	[ZD701]
7	RH-PX0019TAZZ	AD		B	Photo transistor	[D706]
8	VHD1N34A///-1	AB		B	Diode	[D602/603]

4 Coil and Transformers

NO.	PARTS CODE	PRICE RANK	NEW MARK	PART RANK	DESCRIPTION	
1	RCiLB0031TAZZ	AF		C	Oscillation coil	[L601]
2	RCiLF0068CEZZ	AH		C	Coil (Filter)	[L701]
⚠ 3	RCiLH4108TAZZ	BB		B	Deflection yoke	
4	RCiLZ0104TAZZ	AH		C	Coil (H-Line)	[L602]
5	RCiLZ0130TAZZ	AL		C	Coil(H-Size)	[L603]
⚠ 6	RTRNF2129TAZZ	BA	N	B	H-Volt transformer	[T602]
⚠ 7	RTRNP0372TAZZ	BG	N	B	Power transformer (EUROPE except U.K.)	
⚠ 8	RTRNP0373TAZZ	BG	N	B	Power transformer (U.K. only)	
9	RTRNT0017TAZZ	AF		B	Choke transformer	[T601]
10	VP-LK272K0000	AD		C	Peaking coil	[L401]

5 Controls

NO.	PARTS CODE	PRICE RANK	NEW MARK	PART RANK	DESCRIPTION	
1	RVR-B4374CEZZ	AE		B	Variable resistor (FOCUS)	[R637]
2	RVR-B7029TAZZ	AD		C	Variable resistor (V-HOLD)	[R510]
3	RVR-B7031TAZZ	AE		C	Variable resistor (BRIGHT)	[R633]
4	RVR-B7052TAZZ	AE		C	Variable resistor (CONTRAST)	[R401]
5	RVR-M7204TAZZ	AC		C	Variable resistor (+B ADJ)	[R705]
6	RVR-M7208TAZZ	AF		C	Variable resistor (V-SIZE)	[R505]
7	RVR-M7209TAZZ	AC		C	Variable resistor (V-LINE)	[R508]
8	RVR-M7210TAZZ	AC		C	Variable resistor (SUB BRI	[R607]

6 Capacitors

NO.	PARTS CODE	PRICE RANK	NEW MARK	PART RANK	DESCRIPTION	
1	RC-EZ0027TAZZ	AK		C	Capacitor	[C620]
2	RC-EZ0138TAZZ	AN	N	C	Capacitor (25V 4700μF)	[C705]
3	RC-FZ0004CEZZ	AH		C	Capacitor	
4	VCCSPA1HL121J	AD		C	Capacitor (50WV 120pF)	[C412]
5	VCCSPA1HL560J	AB	N	C	Capacitor (50WV 56pF)	[C421]
6	VCEAAU1AW107M	AB		C	Capacitor (100μF 10V)	[C420]
7	VCEAAU1AW226M	AC		C	Capacitor (10WV 22μF)	[C401]
8	VCEAAU1AW227M	AB		C	Capacitor (220μF 10V)	[C508]
9	VCEAAU1AW476M	AB		C	Capacitor (47μF 10V)	[C505]
10	VCEAAA1CW106M	AC		C	Capacitor (16WV 10μF)	[C511/415]
11	VCEAAA1CW107M	AB		C	Capacitor (Japan only)(100μF 16V)	[C650]
12	VCEAAA1CW108M	AD		C	Capacitor (16WV 1000μF)	[C641/509]
13	VCEAAA1CW227M	AC		C	Capacitor (220μF 16V)	[C616]
14	VCEAAA1CW476M	AB		C	Capacitor(Export only) (47μF 16V)	[C409/C513]
15	VCEAAA1CW477M	AD		C	Capacitor (470μF 16V)	[C601/707]
16	VCEAAA1CW227M	AC		C	Capacitor (220μF 25V)	[C406]
17	VCEAAA1CW475M	AC	N	C	Capacitor (25WV 4.7μF)	[C503]
18	VCEAAA1HW105M	AB		C	Capacitor (50WV 1.0μF)	[C629]
19	VCEAAA1HW335M	AB		C	Capacitor (50WV 3.3μF)	[C607]
20	VCEAAA2CW105A	AB		C	Capacitor (160WV 1μF)	[C615/617]
21	VCEAAU2CW106Y	AC		C	Capacitor (160WV 10μF)	[C612]
22	VCEAAH1CW228M	AF		C	Capacitor (2200μF 16V)	[C512]

6 Capacitors

NO.	PARTS CODE	PRICE RANK	NEW MARK	PART RANK	DESCRIPTION	
23	VCEABA1CW226M	AC		C	Capacitor (22μF 16V)	[C506/507]
24	VCKYAT1HX103N	AC		C	Capacitor(Japan only) (0.01μF 50V)	[C701/703/704]
25	VCKYPA2HB221K	AB		C	Capacitor (220pF 500V)	[C643]
26	VCKZPA1HB102K	AB	N	C	Capacitor (50WV 1000pF)	[C413]
27	VCKZPA1HB332K	AC		C	Capacitor (50WV 3300pF)	[C501/502]
28	VCKZPA1HB682K	AC		C	Capacitor (50WV 6800pF)	[C618]
29	VCKZPA1HB821K	AB	N	C	Capacitor (50WV 820pF)	[C402]
30	VCQPSB2GA223K	AB		C	Capacitor (0.022μF 400V)	[613/614/642]
31	VCQPSB2JA103K	AB		C	Capacitor (630WV 0.01μF)	[C632]
32	VCQYKH1HM103J	AB		C	Capacitor (0.01μF 50V)	[C608]
33	VCQYKH1HM103K	AC		C	Capacitor (0.01μF 50V)	[C602]
34	VCQYKH1HM104K	AD	N	C	Capacitor (50WV 0.10μF)	[C430]
35	VCQYKH1HM223K	AC		C	Capacitor (0.022μF 50V)	[C604]
36	VCQYKH1HM333K	AC		C	Capacitor(Export only) (50WV 0.033μF)	[C414/510/611]
37	VCQYKH1HM472K	AC		C	Capacitor (4700μF 50V)	[C603]
38	VCQYKH1HM473J	AB		C	Capacitor(Export only) (0.047μF 50V)	[C609]
39	VCQYKU1HM473K	AB		C	Capacitor (0.047μF 50V)	[C605/C606]
40	VCSATA1VE105K	AC		C	Capacitor(Export only) (1μF 35V)	[C504]

7 Resistors

NO.	PARTS CODE	PRICE RANK	NEW MARK	PART RANK	DESCRIPTION	
1	RR-XZ0015CEZZ	AC	N	C	Resistor	[R640]
2	RR-XZ0037TAZZ	AC	N	C	Resistor	[R651]
3	VRC-MB2EG273J	AB	N	C	Resistor (1/4W 27KΩ ±5%)	[R512]
4	VRD-RA2BE103J	AB	N	C	Resistor (1/8W 10KΩ ±5%)	[R426]
5	VRD-RA2BE104J	AB	N	C	Resistor (1/8W 100KΩ ±5%)	[R403]
6	VRD-RA2BE182J	AA		C	Resistor (1/8W 1.8KΩ ±5%)	[R701]
7	VRD-RA2BE394J	AB	N	C	Resistor (1/8W 390KΩ ±5%)	[R427]
8	VRD-RA2EE102J	AA		C	Resistor (1/4W 1.0KΩ ±5%)	[R413]
9	VRD-RA2EE103J	AA		C	Resistor(Export only) (10KΩ 1/4W ±5%)	[R418/R502]
10	VRD-RA2EE104J	AA		C	Resistor (1/4W 100KΩ ±5%)	[R622]
11	VRD-RA2EE122J	AA		C	Resistor (1/4W 1.2KΩ ±5%)	[R702]
12	VRD-RA2EE123J	AA		C	Resistor (1/4W 12KΩ ±5%)	[R501]
13	VRD-RA2EE152J	AA		C	Resistor (1.5KΩ 1/4W ±5%)	[R602/618/621]
14	VRD-RA2EE153J	AB	N	C	Resistor (1/4W 15KΩ ±5%)	[R419]
15	VRD-RA2EE154J	AB	N	C	Resistor (1/4W 150KΩ ±5%)	[R636]
16	VRD-RA2EE184J	AB	N	C	Resistor (1/4W 180KΩ ±5%)	[R619]
17	VRD-RA2EE221J	AA		C	Resistor (1/4W 220Ω ±5%)	[R429/R613/R402]
18	VRD-RA2EE222J	AB	N	C	Resistor (1/4W 2.2KΩ ±5%)	[R520]
19	VRD-RA2EE272J	AA		C	Resistor (1/4W 2.7KΩ ±5%)	[R503]
20	VRD-RA2EE332J	AA		C	Resistor (1/4W 3.3KΩ ±5%)	[428/608/609]
21	VRD-RA2EE392J	AA		C	Resistor (1/4W 3.9KΩ ±5%)	[R611]
22	VRD-RA2EE470J	AB	N	C	Resistor (1/4W 47Ω ±5%)	[R421]
23	VRD-RA2EE472J	AA		C	Resistor (1/4W 4.7KΩ ±5%)	[R605]
24	VRD-RA2EE473J	AA		C	Resistor (1/4W 47KΩ ±5%)	[R635]
25	VRD-RA2EE560J	AA		C	Resistor (1/4W 56Ω ±5%)	[R616]
26	VRD-RA2EE561J	AA		C	Resistor(Japan only) (560Ω 1/4W ±5%)	[R603/417/706]
27	VRD-RA2EE563J	AB	N	C	Resistor (1/4W 56KΩ ±5%)	[R617]
28	VRD-RA2EE680J	AA		C	Resistor (1/4W 68Ω ±5%)	[R450/R612]
29	VRD-RA2EE682J	AA		C	Resistor (1/4W 6.8KΩ ±5%)	[R606]
30	VRD-RA2EE822J	AA		C	Resistor (1/4W 8.2KΩ ±5%)	[R504/R620]
31	VRD-RA2EE823J	AA		C	Resistor (1/4W 82KΩ ±5%)	[R420]
32	VRD-RA2HDR50J	AB	N	C	Resistor (1/2W 0.50Ω ±5%)	[R509]
33	VRD-RA2HD1R2J	AA		C	Resistor (1/2W 1.2Ω ±5%)	[R638]
34	VRD-RA2HD2R2J	AA		C	Resistor (1/2W 2.2Ω ±5%)	[R513]
35	VRD-RA2HD2R7J	AA		C	Resistor (2.7Ω 1/2W ±5%)	[R514]
36	VRD-RA2HD274J	AA		C	Resistor (1/2W 270KΩ ±5%)	[R624/R650]
37	VRD-RA2HD3R9J	AA		C	Resistor (3.9Ω 1/2W ±5%)	[R639]
38	VRD-RA2HD560J	AA		C	Resistor (1/2W 56Ω ±5%)	[R614]
⚠ 39	VRS-PV3AB680J	AB	N	C	Resistor (1W 68Ω ±5%)	[R703]
40	VRS-PV3DB150J	AB		C	Resistor(Export only) (15Ω 2W ±5%)	[R615]
41	VRS-PV3DB330J	AC	N	C	Resistor (2W 33Ω ±5%)	[R601]
42	VRS-PV3DB392J	AC	N	C	Resistor (2W 3.9KΩ ±5%)	[R623]
⚠ 43	VRS-PV3DB472J	AB		C	Resistor (4.7KΩ 2W ±5%) ✗	[R412]
⚠ 44	VRW-KV41C220J	AE	N	C	Resistor (15W 22Ω ±5%)	[R704]

8 Miscellaneous Parts

NO.	PARTS CODE	PRICE RANK	NEW MARK	PART RANK	DESCRIPTION	
1	PRDAF0127TAZZ	AC	N	C	Heat sink	[Hon-P]
2	PRDAF0169TAFW	AD	N	C	Heat sink	
3	PRDAF0170TAFW	AB	N	C	Heat sink	
4	PRDAF0187TAFW	AG	N	C	Heat sink	
5	PSLDM0374TAZZ	AH	N	C	Shield	
6	PSLDM0375TAZZ	AH	N	C	Shield	
7	PSLDM0378TAZZ	AL	N	C	Shield	
8	PSLDM0379TAZZ	AM	N	C	Shield	
9	PSLDM0387TAZZ	AE	N	C	Shield	
10	PSLDM0388TAZZ	AC	N	C	Shield	

8 Miscellaneous Parts

NO.	PARTS CODE	PRICE RANK	NEW MARK	PART RANK	DESCRIPTION	
11	PSLDM0389TAZZ	AD	N	C	Shield	
12	PSLDM0397TAZZ	AK	N	C	Shield	
13	PZETV0117TAZZ	AD	N	C	Insulator	
14	PZETV0119TAZZ	AC	N	C	Insulator	
15	QACCZ0026TAZZ	AY		D	AC cord (EUROPE except U.K.)	
⚠ 16	QACCB0011TAZZ	BB		D	AC cord (U.K. only)	
17	QCNW-0346TAZZ	AK	N	C	Connecting cord	
18	QCNW-0365TAZZ	AM	N	C	Connecting cord	
19	QCNW-0383TAZZ		N	C	Connecting cord	
20	QEARP0038TAFW	AC	N	C	Ground-part	
21	QEARP0058TAFW	AB	N	C	Ground-part	
⚠ 22	QFS-C2521TAZZ	AE		A	Fuse	[F702]
⚠ 23	QFS-C3111TAZZ	AE		A	Fuse	[F501]
⚠ 24	QFSHD1002CEZZ	AA		C	Fuse holder	
25	QPLGN0207CEZZ	AA		C	Plug	
26	QPLGN0304CEZZ	AB		C	Plug	
27	QPLGN0304CEZZ	AB		C	Plug	
28	QPLGN0404CEZZ	AB		C	Plug (4pin DY)	
29	QPLGN0408CEZZ	AB		C	Plug (4pin PT)	
30	QSOCA0016TAZZ	AK		C	Socket	
31	QSOCN0210CEZZ	AB	N	C	Socket	
32	QSOCN0302CEZZ	AB	N	C	Socket	
33	QSOCN0604CEZZ	AC	N	C	Socket	
34	QSOCV0026TAZZ	AC		C	Socket	
35	QSPGC0011CEZZ	AC		C	Spark gap	[SG601/602/604]
36	QSPGH0005CEZZ	AG	N	C	Spark gap	[SG603]
37	QSW-P0137CEZZ	AL		A	Switch	[SW701]
38	QTANZ0012TAZZ	AM		C	Terminal	

9 The Others Parts

NO.	PARTS CODE	PRICE RANK	NEW MARK	PART RANK	DESCRIPTION
1	SPAKC5266TAZZ	AP	N	D	Packing case (EUROPE except U.K.)
2	SPAKC5267TAZZ	AP	N	D	Packing case (U.K. only]
3	SPAKP4128TAZZ	AD		D	Wrapping paper
4	SSKA0003GEZZ/	AB	N	D	Polyethylene bag
5	TINSZ5266TAZZ	AG	N	D	Instruction book

10 Cabinet Parts

NO.	PARTS CODE	PRICE RANK	NEW MARK	PART RANK	DESCRIPTION
1	DCABA5267TA01	BD	N	D	Cabnet (U.K. only)
2	DCABA5266TA01	BD	N	D	Cabnet (EUROPE except U.K.)
3	GCABA5266TASA	BB	N	D	Cabnet
4	GCABB5266TASA	BB	N	D	Cabnet
6	GLEGG9009CEZZ	AB		D	Foot
7	HBDGB1002CESA	AD		D	Badge
8	JBTN-1091CESB	AE		C	Button
9	TCAUA0057TAZZ	AC	N	D	Caution card
10	TLABK0001TAZZ	AA		D	Label
11	TLABM0004TAZZ	AA	N	D	Label (EUROPE except U.K.)
12	TLABN0022TAZZ	AA		D	Label
13	TLABS0021TAZZ	AD	N	D	Label
14	TLABM1005TAZZ	AA	N	D	Label (U.K. only)

11 Mechanical Parts

NO.	PARTS CODE	PRICE RANK	NEW MARK	PART RANK	DESCRIPTION
1	LANGK0198TAZZ	AG	N	C	Fixing metal
2	LANGQ0187TAZZ	AC	N	C	Fixing metal
3	LANGR5045CEZZ	AN	N	C	Fixing metal

12 Screws,Nuts,Washers and Wire holder

NO.	PARTS CODE	PRICE RANK	NEW MARK	PART RANK	DESCRIPTION
1	LHLDW1006GEZZ	AB	N	C	Holder
2	LHLDW1033CE00	AB	N	C	Holder
3	LHLDW1046CEZZ	AB	N	C	Holder
4	LHLDW9003TAZZ	AA		C	Holder
5	LX-BZ3086CEFD	AB	N	C	Screw
6	LX-NZ0060TAZZ	AB	N	C	Nut
7	LX-UZ0003TAFD	AB	N	C	Screw
8	LX-WZ0015TAFN	AB	N	C	Washer
9	XBMSD30P08000	AB	N	C	Screw
10	XBPBN30P05000	AB	N	C	Screw
11	XCASD30P08000	AA		C	Screw
12	XCASD40P10000	AB	N	C	Screw
13	XCASD40P12000	AA		C	Screw
14	XTASD40P16000	AB		C	Screw
15	XUASD30P10000	AA		C	Screw

12 Screws, Nuts, Washers and Wire holder

NO.	PARTS CODE	PRICE RANK	NEW MARK	PART RANK	DESCRIPTION
16	XWSSN30—08000	AA	N	C	Washer
17	GNETC0034TAZZ	AH	N	C	Net
18	QLUGZ0105CEZZ	AB	N	C	Lug
20	QTiPM0008CEZZ	AB	N	C	Tip
21	QTiPM0025TAZZ	AB	N	C	Tip
22	QTiPN0019CEZZ	AB	N	C	Tip
23	SPAKA5135TAZZ	AP		D	Packing add.